FARO BARCELONA

RING

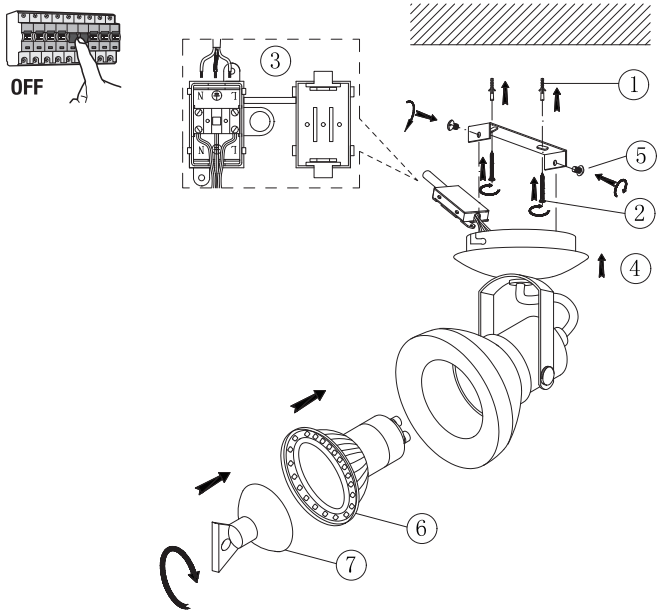

ref. 40550
- white-blanco

ref. 40551
- dark grey-gris oscuro

ref. 40552
- matt nickel-níquel mate

1 x GU10 LED max.8W no incl.

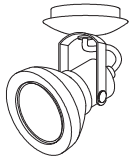

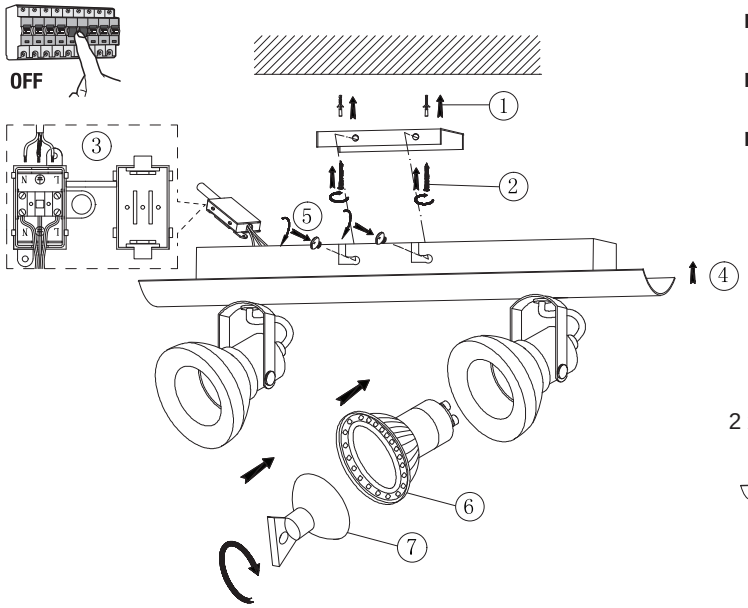

ref. 40553
- white-blanco

ref. 40554
- dark grey-gris oscuro

ref. 40555
- matt nickel-níquel mate

2 x GU10 LED max.8W no incl.

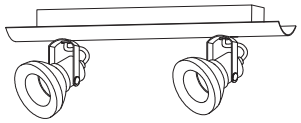

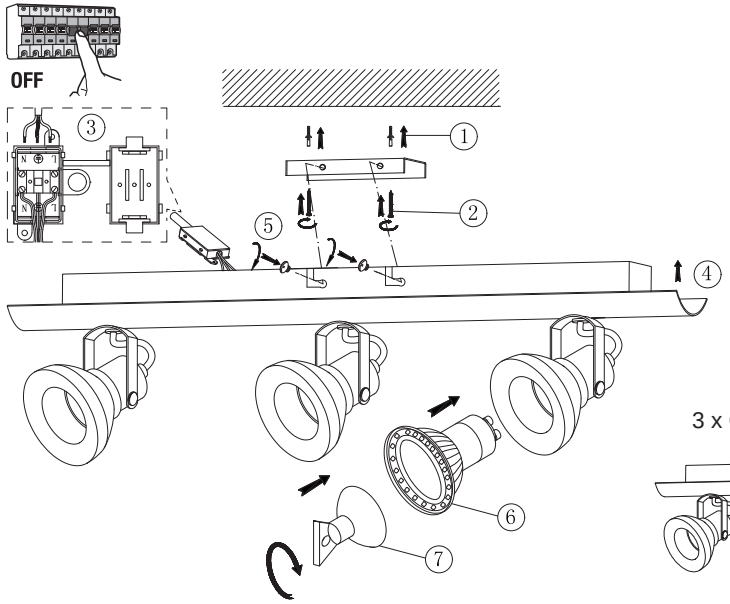

ref. 40556
- white-blanco

ref. 40557
- dark grey-gris oscuro

ref. 40558
- matt nickel-níquel mate

3 x GU10 LED max.8W no incl.

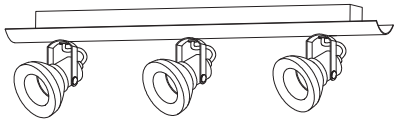

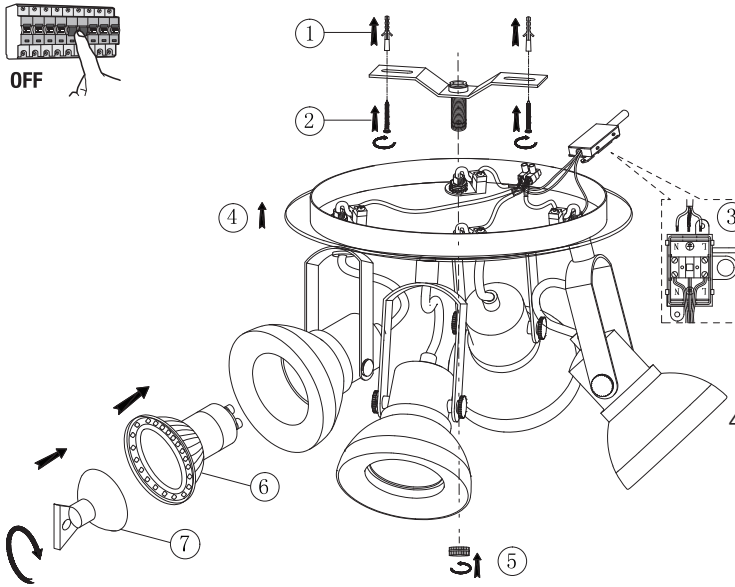

ref. 40559
- white-blanco

ref. 40560
- dark grey-gris oscuro

ref. 40561
- matt nickel-níquel mate

4 x GU10 LED max.8W no incl.

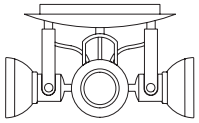

TECHNICAL FEATURES - CARACTERISTICAS TÉCNICAS

0,2m | IP20 | 100V-240V~50Hz/60Hz

LOREFAR, SL • Dinámica, nº1 • Polígono Industrial Santa Rita • 08755 Castellbisbal • Barcelona • Spain • faro@lorefar.com • www.faro.es